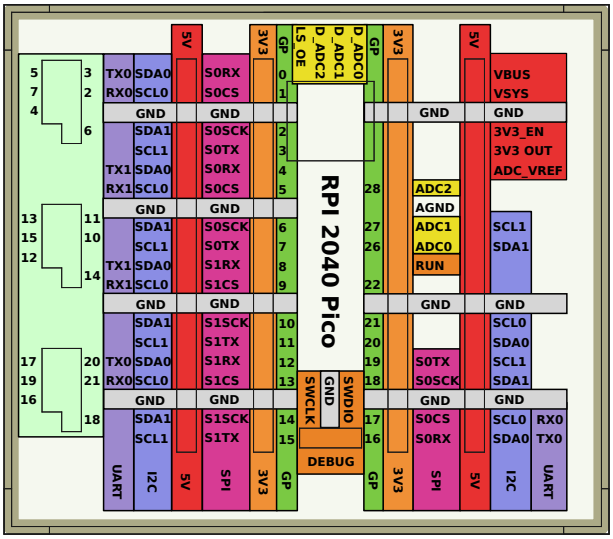
RPI 2040 Pico
5V
3V3
GP
LS_OE
D_ADC2
D_ADC1
D_ADC0
3V3
GP
5V
VBUS
VSYS
GND
GND
3V3_EN
3V3 OUT
ADC_VREF
ADC2
AGND
ADC1
ADC0
RUN
SCL1
SDA1
GND
GND
SCL0
SDA0
SCL1
SDA1
S0TX
S0SCK
GND
GND
SCL0
SDA0
RX0
TX0
S0CS
S0RX
SWCLK
GND
SWDIO
DEBUG
UART
I2C
5V
SPI
3V3
GP
GP
3V3
SPI
5V
I2C
UART
TX0
RX0
SDA0
SCL0
S0RX
S0CS
GND
GND
SDA1
SCL1
S0SCK
S0TX
TX1
RX1
SDA0
SCL0
S0RX
S0CS
GND
GND
SDA1
SCL1
S0SCK
S0TX
TX1
RX1
SDA0
SCL0
S1RX
S1CS
GND
GND
SDA1
SCL1
S1SCK
S1TX
TX0
RX0
SDA0
SCL0
S1RX
S1CS
GND
GND
SDA1
SCL1
S1SCK
S1TX
5
7
4
3
2
6
13
15
12
11
10
14
17
19
16
20
21
18

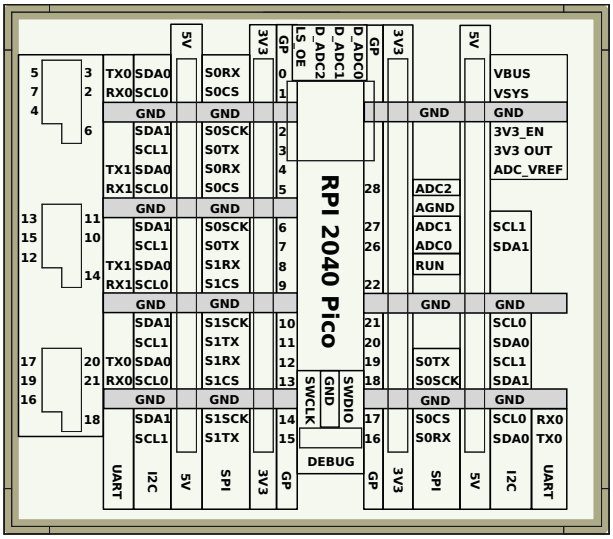
RPI 2040 Pico
5V
3V3
GP
LS_OE
D_ADC2
D_ADC1
D_ADC0
3V3
GP
5V
VBUS
VSYS
GND
GND
3V3_EN
3V3 OUT
ADC_VREF
ADC2
AGND
ADC1
ADC0
RUN
SCL1
SDA1
GND
GND
SCL0
SDA0
SCL1
SDA1
S0TX
S0SCK
GND
GND
SCL0
SDA0
RX0
TX0
S0CS
S0RX
SWCLK
GND
SWDIO
DEBUG
UART
I2C
5V
SPI
3V3
GP
GP
3V3
SPI
5V
I2C
UART
TX0
RX0
SDA0
SCL0
S0RX
S0CS
GND
GND
SDA1
SCL1
S0SCK
S0TX
TX1
RX1
SDA0
SCL0
S0RX
S0CS
GND
GND
SDA1
SCL1
S0SCK
S0TX
TX1
RX1
SDA0
SCL0
S1RX
S1CS
GND
GND
SDA1
SCL1
S1SCK
S1TX
TX0
RX0
SDA0
SCL0
S1RX
S1CS
GND
GND
SDA1
SCL1
S1SCK
S1TX
5
7
4
3
2
6
13
15
12
11
10
14
17
19
16
20
21
18