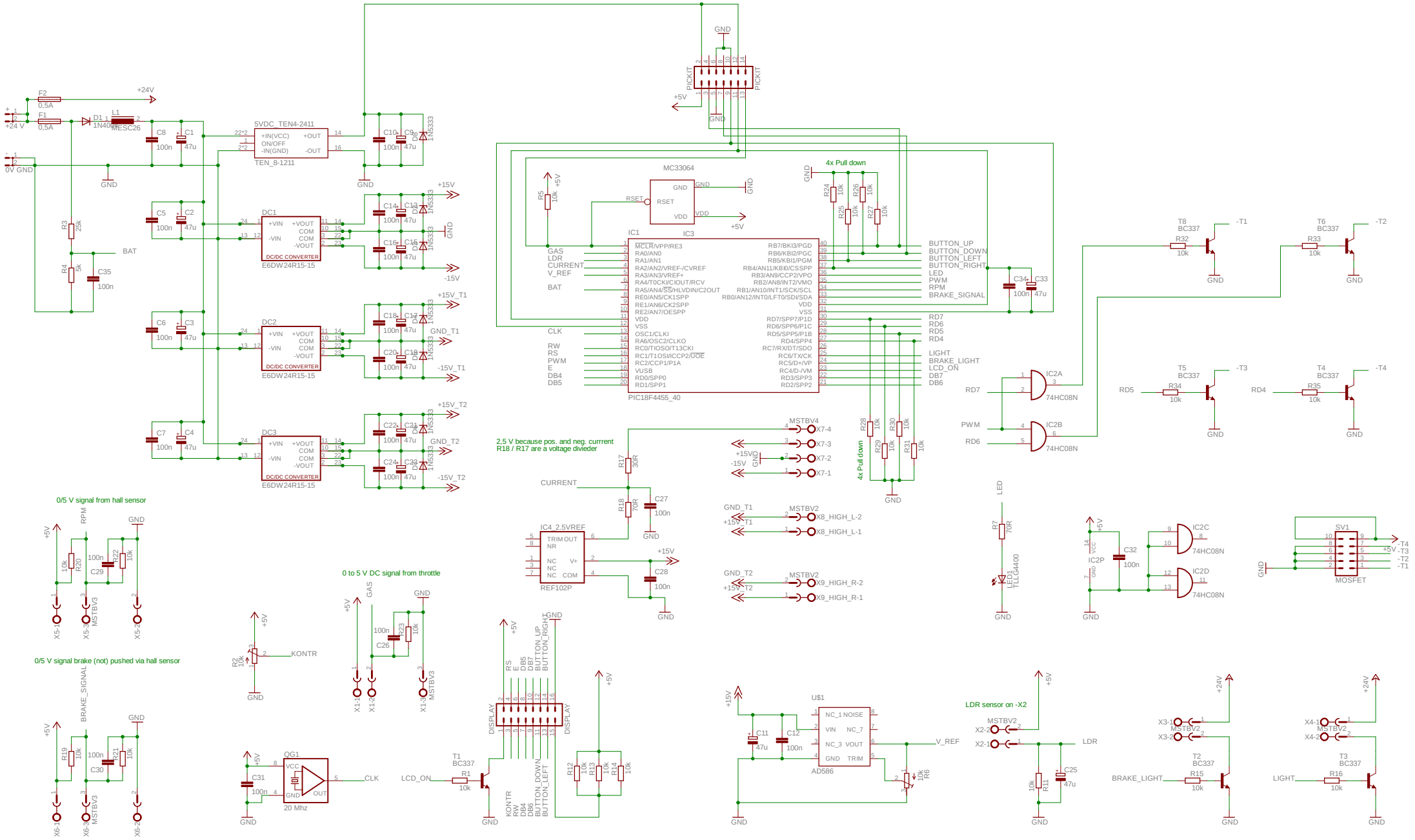

18.04.2021 13:35:12 f=0.59 D:\EAGLE DATEN\Controller neu final.sch (Sheet: 1/1)