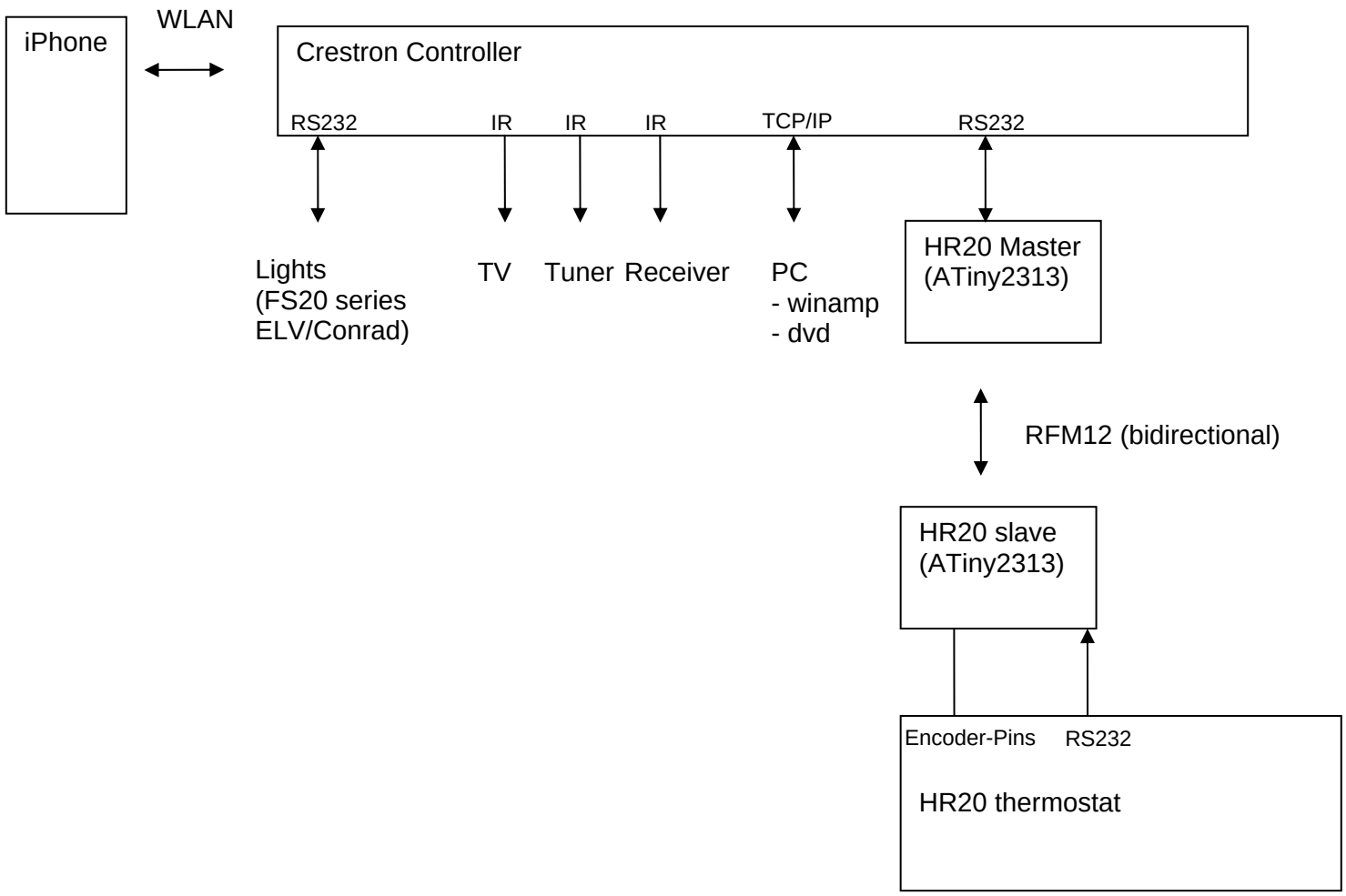
iPhone
WLAN
Crestron Controller
RS232
IR
IR
IR
TCP/IP
RS232
Lights
(FS20 series
ELV/Conrad)
TV
Tuner
Receiver
PC
- winamp
- dvd
HR20 Master
(ATiny2313)
RFM12 (bidirectional)
HR20 slave
(ATiny2313)
Encoder-Pins
RS232
HR20 thermostat