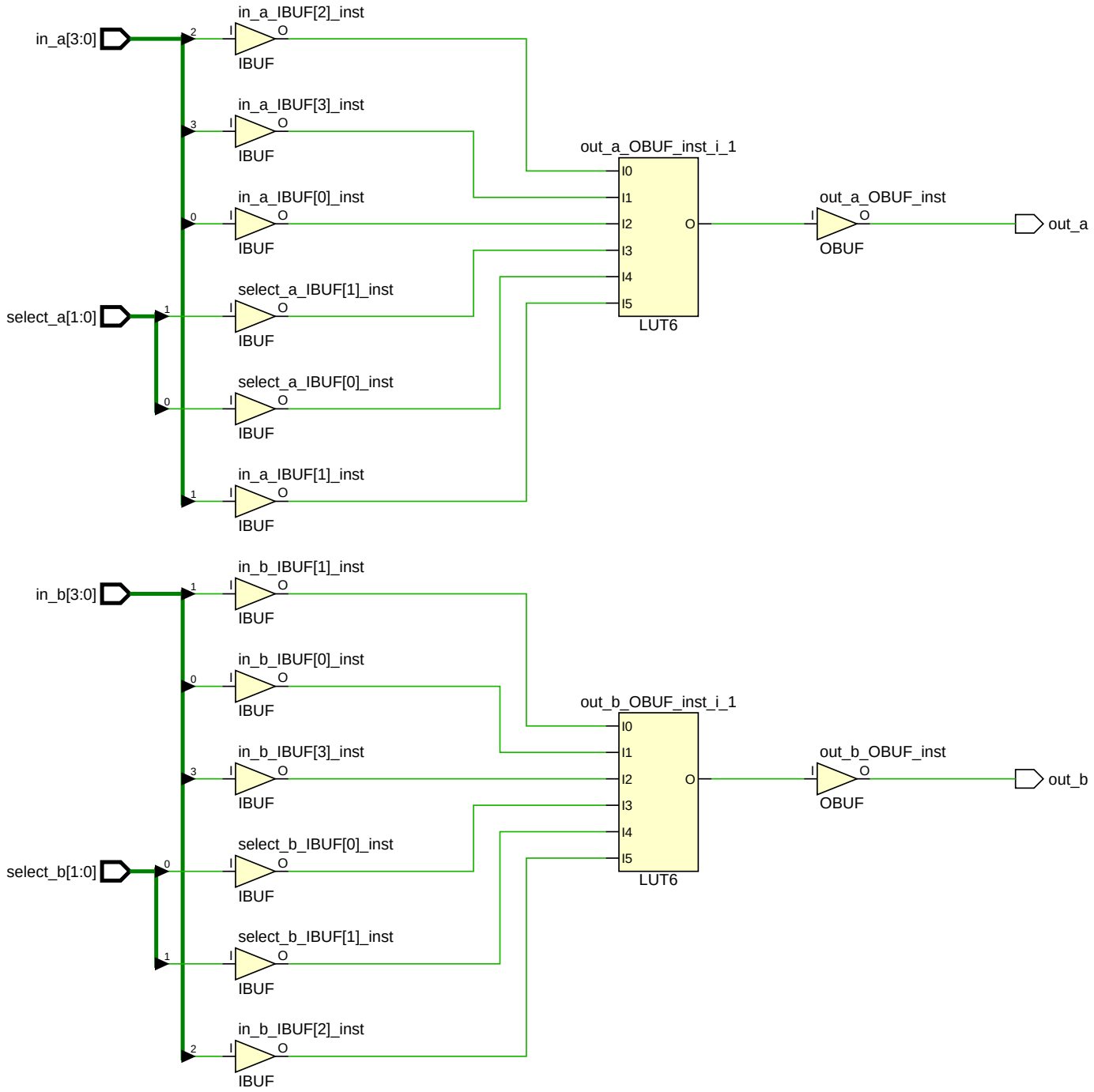
in_a[3:0]
in_a_IBUF[2]_inst
IBUF
in_a_IBUF[3]_inst
IBUF
in_a_IBUF[0]_inst
IBUF
select_a[1:0]
select_a_IBUF[1]_inst
IBUF
select_a_IBUF[0]_inst
IBUF
in_a_IBUF[1]_inst
IBUF
out_a_OBUF_inst_i_1
LUT6
out_a_OBUF_inst
OBUF
out_a
in_b[3:0]
in_b_IBUF[1]_inst
IBUF
in_b_IBUF[0]_inst
IBUF
in_b_IBUF[3]_inst
IBUF
select_b[1:0]
select_b_IBUF[0]_inst
IBUF
select_b_IBUF[1]_inst
IBUF
in_b_IBUF[2]_inst
IBUF
out_b_OBUF_inst_i_1
LUT6
out_b_OBUF_inst
OBUF
out_b