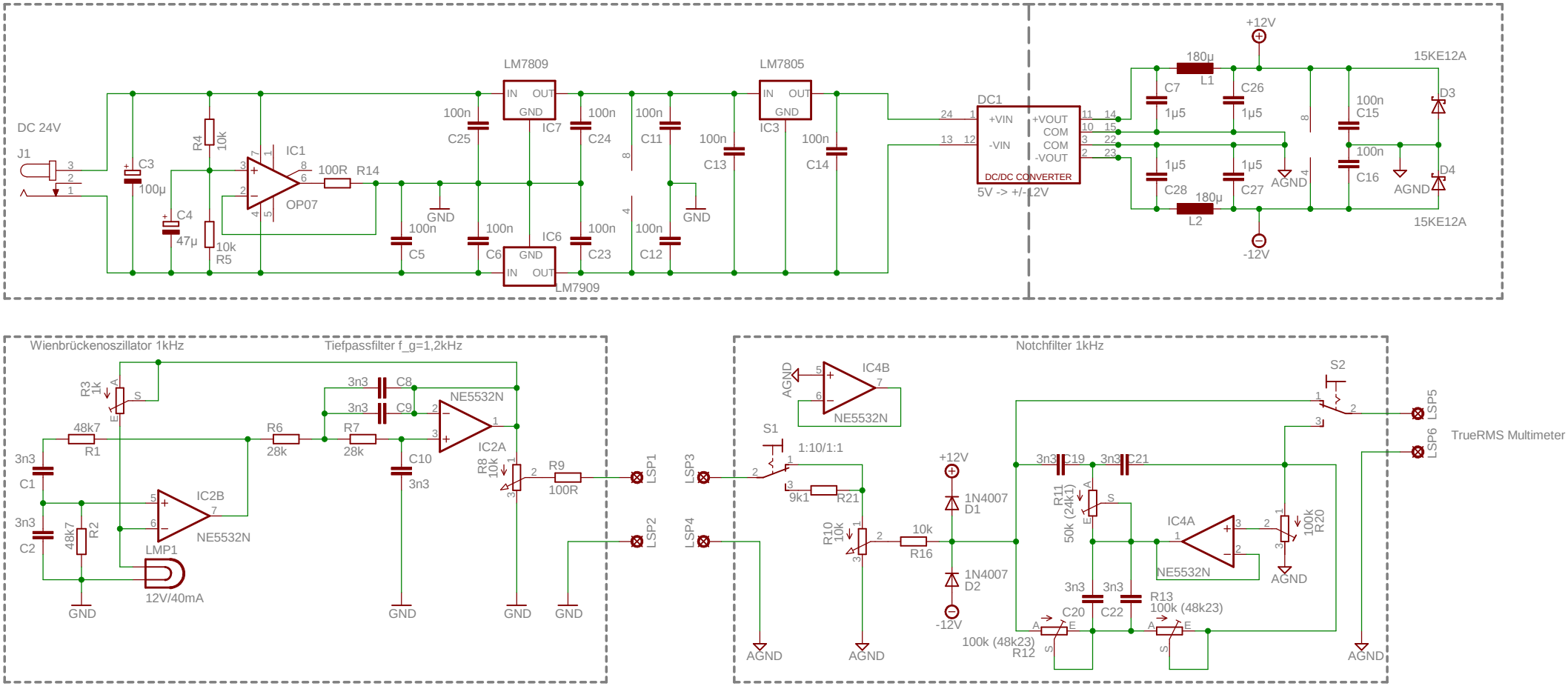
DC 24V
J1
C3
100µ
R4
10k
C4
47µ
10k
R5
IC1
OP07
100R
R14
LM7809
IN
OUT
GND
IC7
100n
C25
100n
C24
100n
C11
100n
C13
LM7805
IC3
100n
C14
GND
100n
C5
100n
C6
IC6
LM7909
100n
C23
100n
C12
DC1
+VIN
-VIN
+VOUT
COM
COM
-VOUT
DC/DC CONVERTER
5V -> +/-12V
+12V
180µ
L1
C7
1µ5
C26
1µ5
15KE12A
D3
100n
C15
100n
C16
D4
AGND
1µ5
C28
1µ5
C27
180µ
L2
-12V
15KE12A
Wienbrückenoszillator 1kHz
Tiefpassfilter f_g=1,2kHz
R3
1k
48k7
R1
3n3
C1
3n3
C2
48k7
R2
IC2B
NE5532N
LMP1
12V/40mA
GND
R6
28k
R7
28k
3n3
C8
3n3
C9
NE5532N
IC2A
C10
3n3
R8
10k
R9
100R
GND
GND
GND
LSP1
LSP2
LSP3
LSP4
Notchfilter 1kHz
AGND
IC4B
NE5532N
S1
1:10/1:1
9k1
R21
R10
10k
10k
R16
+12V
1N4007
D1
1N4007
D2
-12V
AGND
AGND
3n3
C19
3n3
C21
R11
50k (24k1)
IC4A
NE5532N
R20
100k
AGND
3n3
C20
3n3
C22
R13
100k (48k23)
100k (48k23)
R12
AGND
S2
LSP5
LSP6
TrueRMS Multimeter