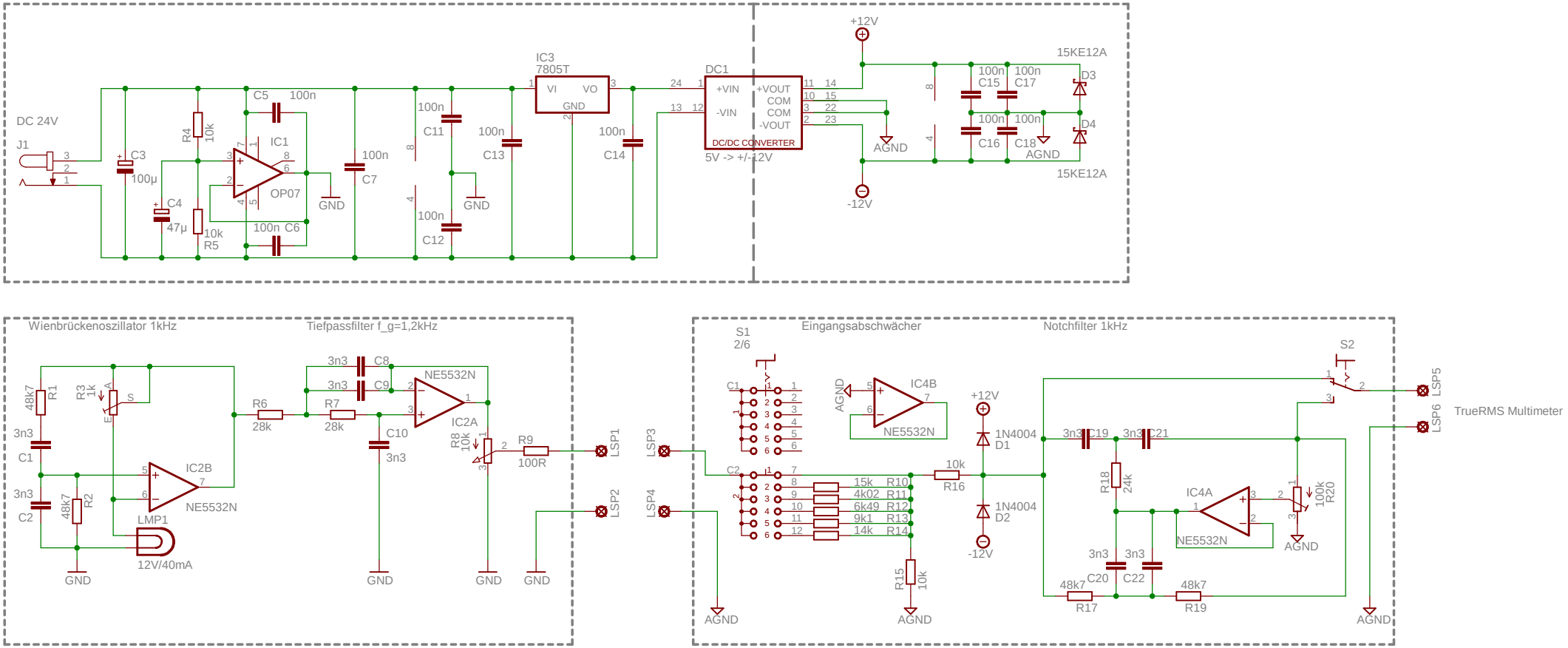
DC 24V
J1
C3
100µ
R4
10k
C4
47µ
R5
10k
IC1
OP07
C5
100n
C6
100n
GND
C7
100n
C11
100n
C12
100n
GND
C13
100n
IC3
7805T
VI
VO
GND
C14
100n
DC1
+VIN
-VIN
+VOUT
COM
COM
-VOUT
DC/DC CONVERTER
5V -> +/-12V
+12V
-12V
AGND
15KE12A
D3
D4
C15
100n
C17
100n
C16
100n
C18
100n
AGND
Wienbrückenoszillator 1kHz
Tiefpassfilter f_g=1,2kHz
48k7
R1
R3
1k
3n3
C1
3n3
C2
48k7
R2
IC2B
NE5532N
LMP1
12V/40mA
GND
R6
28k
3n3
C8
3n3
C9
R7
28k
C10
3n3
NE5532N
IC2A
R8
10k
R9
100R
GND
GND
LSP1
LSP2
LSP3
LSP4
S1
2/6
Eingangsabschwächer
Notchfilter 1kHz
C1
C2
15k R10
4k02 R11
6k49 R12
9k1 R13
14k R14
R15
10k
AGND
AGND
IC4B
NE5532N
10k
R16
+12V
1N4004
D1
1N4004
D2
-12V
3n3
C19
3n3
C21
R18
24k
IC4A
NE5532N
100k
R20
AGND
3n3
C20
3n3
C22
48k7
R17
48k7
R19
AGND
S2
LSP5
LSP6
TrueRMS Multimeter