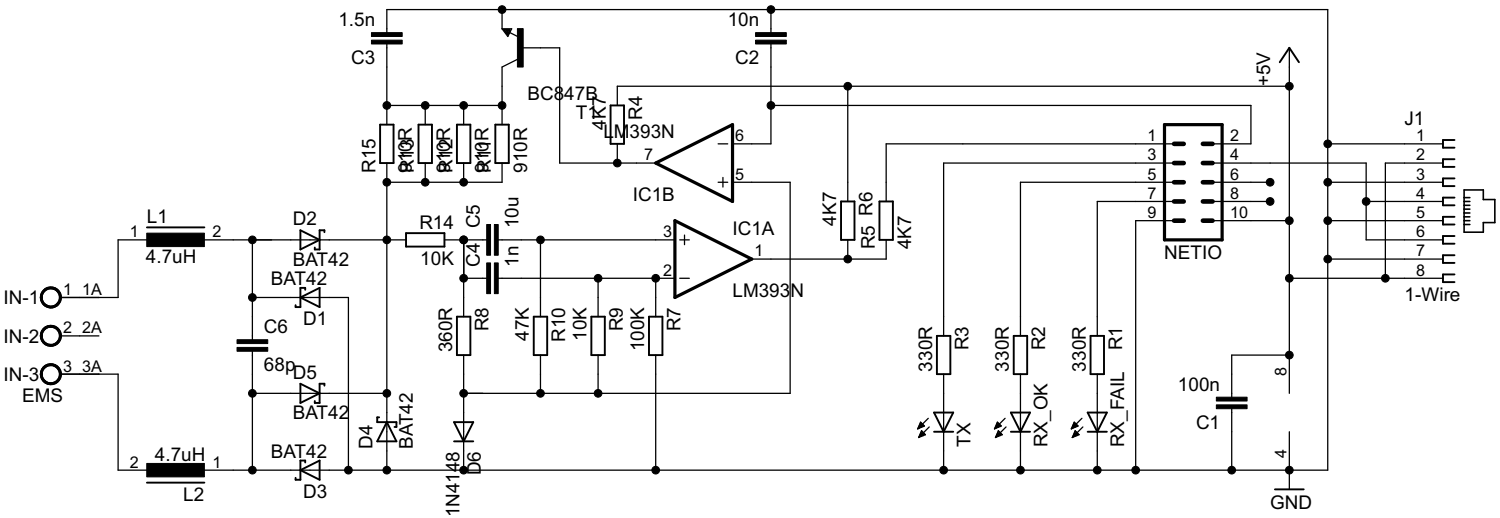

EMS-NetIO-Adapter

Software: Ethersex and Danny Baumanns AddOn